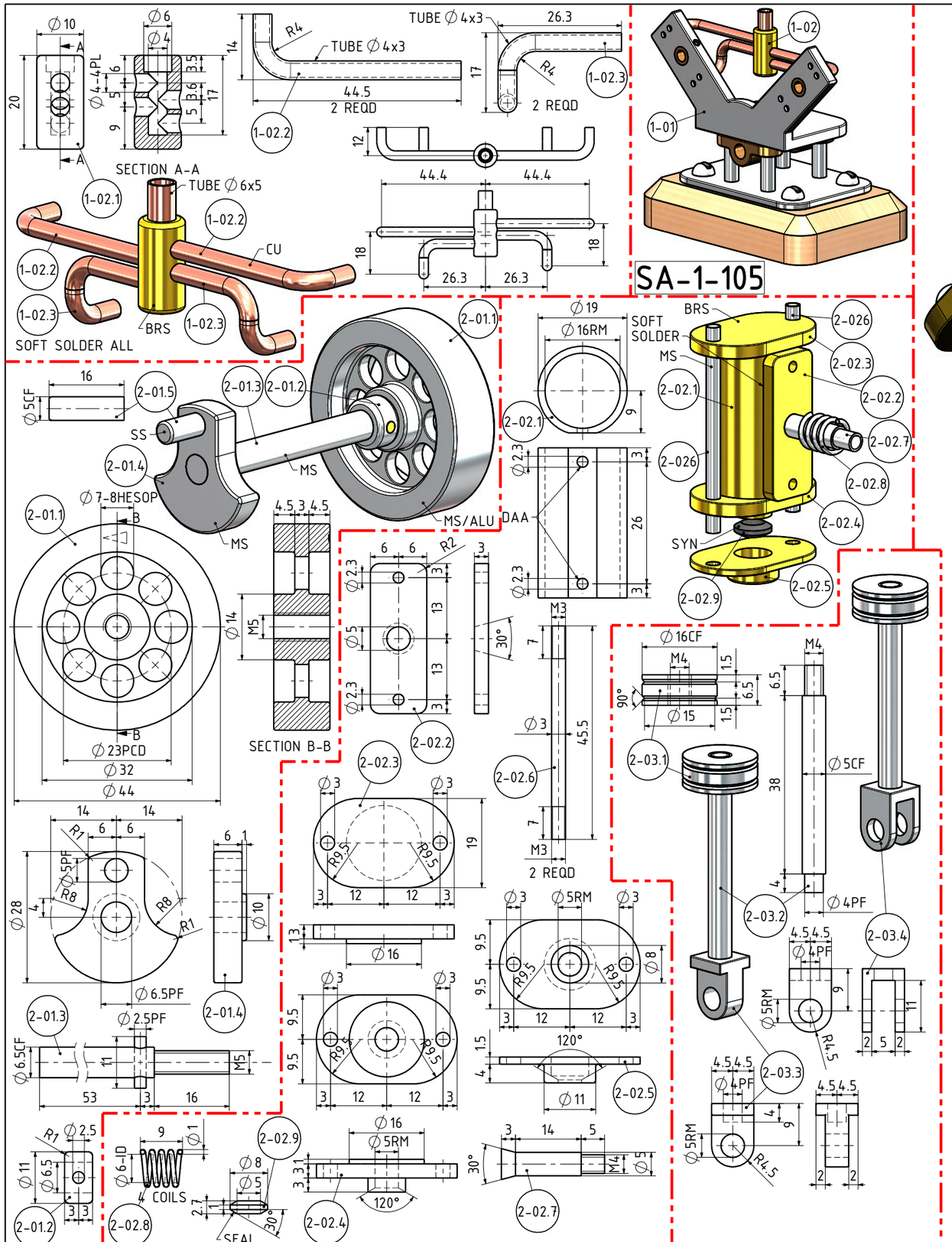

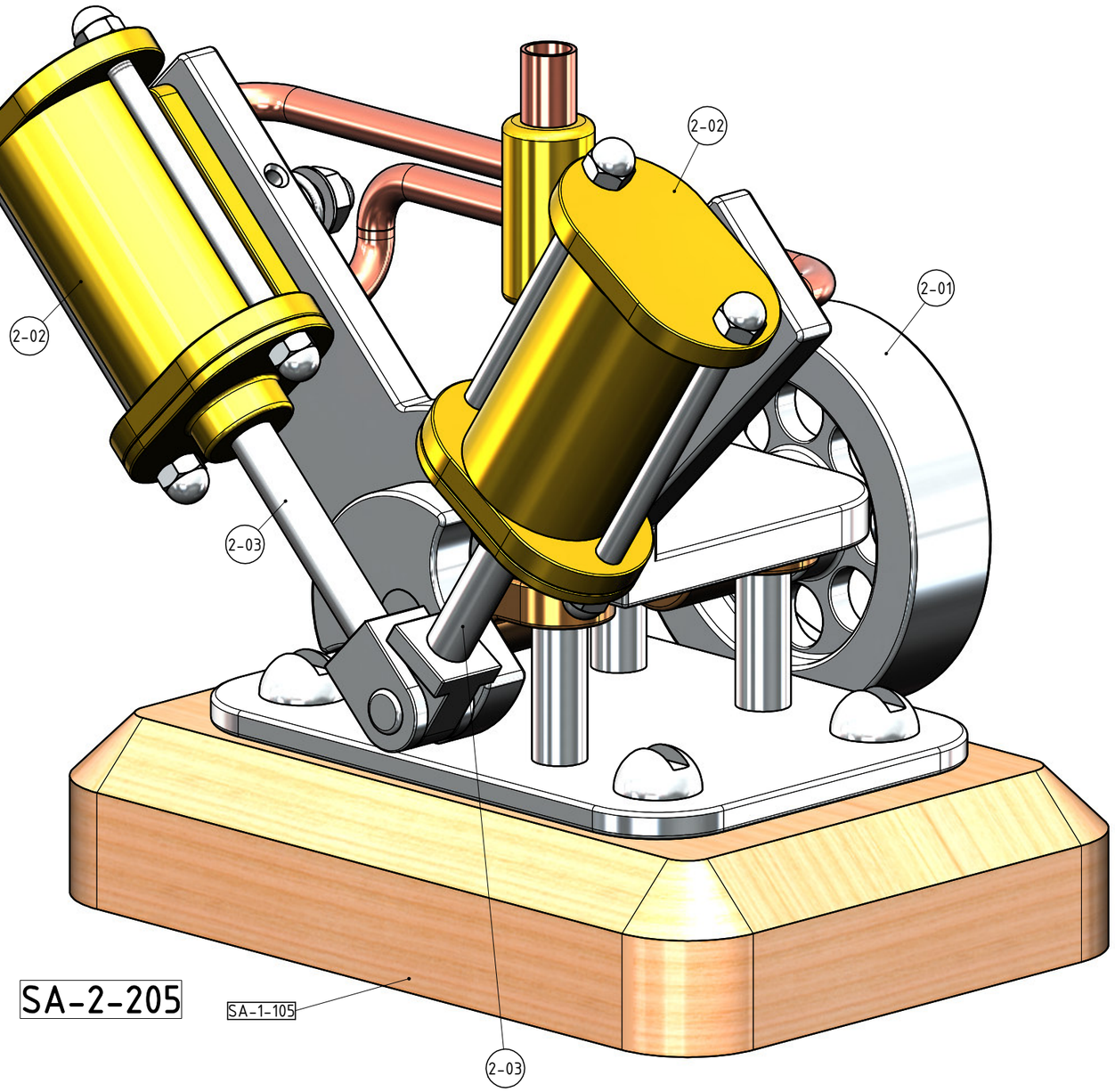

NOTES: THE ORIGINAL DRAWINGS WERE GIVEN TO ME. THE ORIGINAL DRAWINGS AND ARTICLE WERE PUBLISHED UNDER THE TITLE "A TWIN-CYLINDER OSCILLATING ENGINE" BY J.V.ROMIG IN AN UN-SPECIFIED MAGAZINE PAGES 139, 140, 141.

TITLE 2 CYLINDER V-TYPE OSCILLATING STEAM ENGINE. (BORE=16mm STROKE=20mm)	DRAWING CONTENTS PARTS AND ASSEMBLIES	PROJECTION JDWDS	MODEL SCALE: 1:1
			DWG SCALE: 1:1 @A3 OR AS SHOWN
	PROJECT No 09A-50-00	DATE JANUARY 2025	Copyright © J.A.M. DE WAAL PAPAKURA NZ
	JDW DRAUGHTING SERVICES J.A.M. DE WAAL. 12 BRIGHTWELL STREET PAPAKURA 2110. NEW ZEALAND. PHONE: 0064 09 2988815. MOB: 0211791000 E-MAIL: dewaal@xtra.co.nz.	SHEET: 02 OF 02	A3 No:09A-50-00-SHT-02

DRAWINGS ARE FOR PERSONAL USE ONLY NOT FOR COMMERCIAL PURPOSES