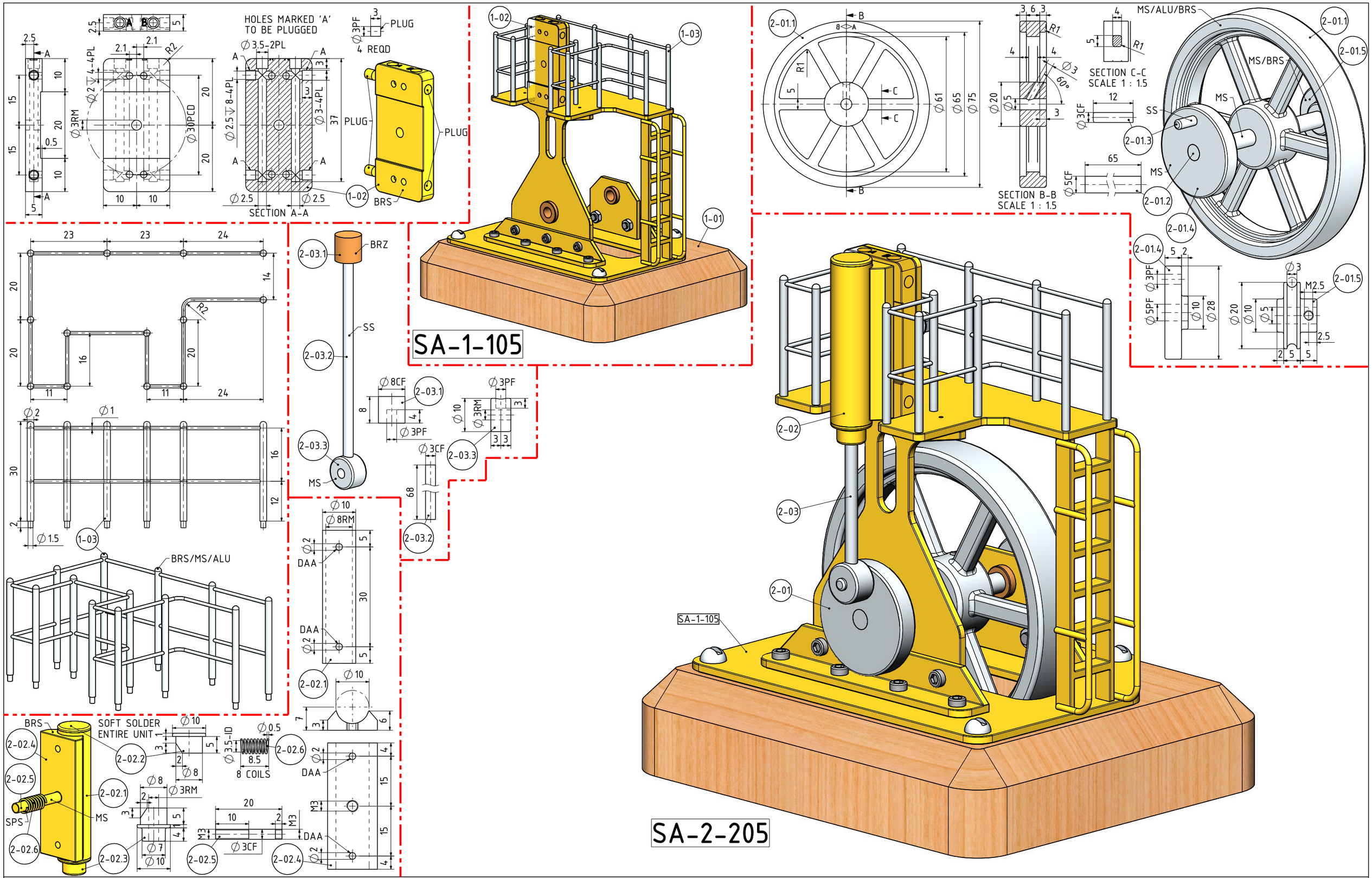

NOTES: THE ORIGINAL DRAWINGS ERE GIVEN TO ME. THE DRAWINGS AND ARTCLES ARE BY ROB VAN DORT, AND WERE PUBLISHED IN AN UNKNOWN MAGAZINE (PAGES 44 TO 50) UNDER THE TITLE "SIMPLEX & DUPLEX". THE REAL ORIGINAL DESIGN AND DRAWINGS WERE BY P.H.VAN POPTA AND WERE PUBLISHED IN THE MAGAZINE OF "NEDERLANDSE VERENIGING VAN MODEL-BOUWERS"

TITLE
1 CYLINDER VERTICAL OSCILLATING STEAM ENGINE. (BORE=8mm STROKE=20mm)

DRAWING CONTENTS
PARTS AND ASSEMBLIES

PROJECT No 09A-49-00

JDW DRAUGHTING SERVICES
J.A.M. DE WAAL. 12 BRIGHTWELL STREET PAPAKURA 2110. NEW ZEALAND. PHONE: 0064 09 2988815. MOB: 0211791000 E-MAIL: dewaal@xtra.co.nz.

PROJECTION JDWDS

DATE JANUARY 2025

MODEL SCALE: 1:1
DWG SCALE: 1:1 @A3 OR AS SHOWN

Copyright © J.A.M. DE WAAL PAPAKURA NZ

SHEET: 02 OF 02 A3 No:09A-49-00-SHT-02

DRAWINGS ARE FOR PERSONAL USE ONLY NOT FOR COMMERCIAL PURPOSES