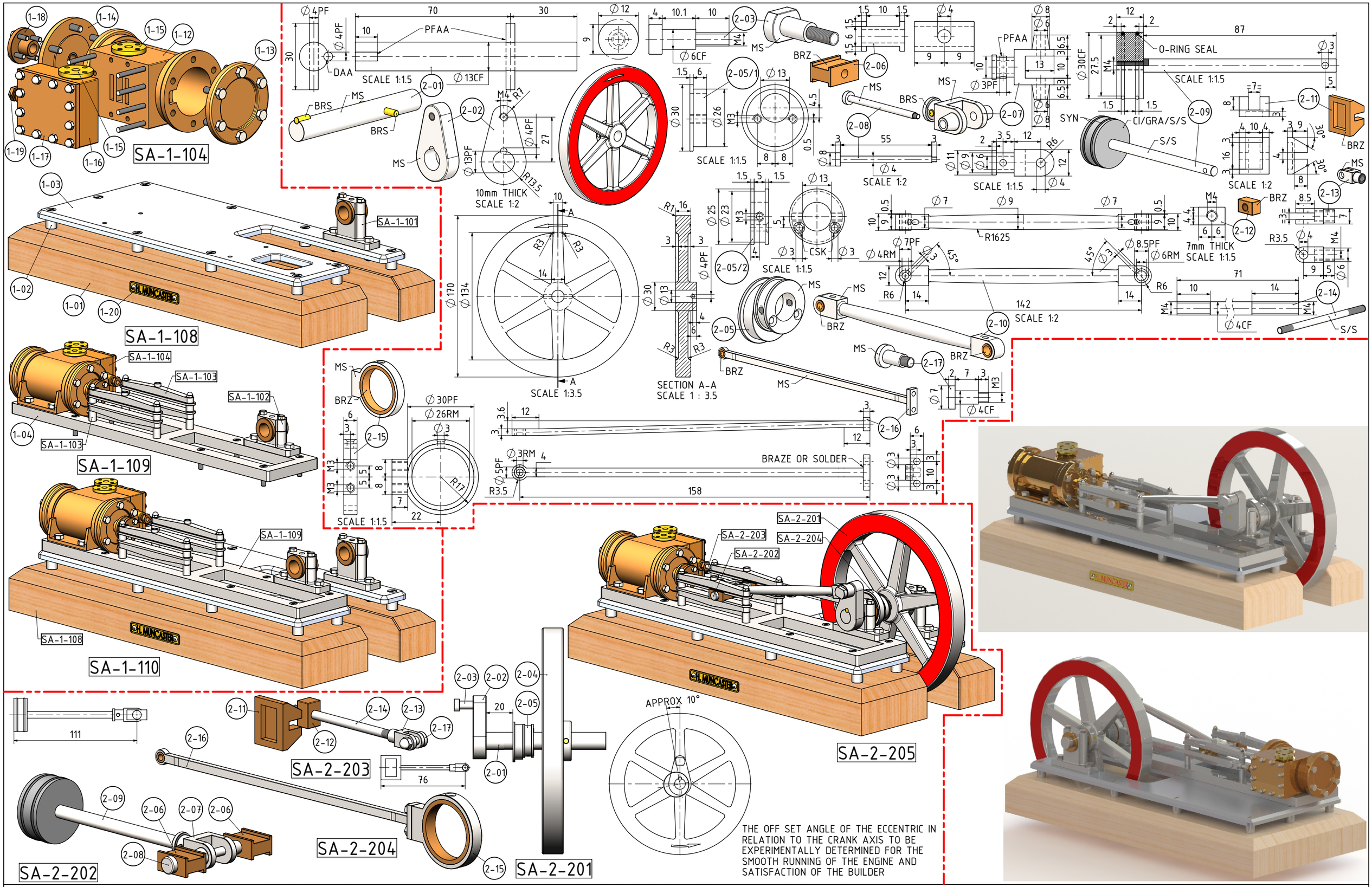

NOTES: THE ORIGINAL DRAWINGS WERE PUBLISHED IN THE "MODEL ENGINEER" MAGAZINE OF MARCH 1957 UNDER THE HEADING OF "THE MUNCASTER STEAM-ENGINE MODELS".

TITLE A SIMPLE HORIZONTAL MILL STEAM ENGINE WITH SLIDE VALVE BY H.MUNCASTER.	DRAWING CONTENTS PARTS AND ASSEMBLIES	PROJECT No 11-03-00 JDW DRAUGHTING SERVICES J.A.M. DE WAAL. 12 BRIGHTWELL STREET PAPAKURA 2110. NEW ZEALAND. PHONE: 0064 09 2988815. MOB: 0211791000 E-MAIL: dewaal@xtra.co.nz.	PROJECTION JDWDS DATE MARCH-2016 SHEET: 03 OF 03
			MODEL SCALE: 1:1 DWG SCALE: 1:1 @A3 OR AS SHOWN Copyright © J.A.M. DE WAAL PAPAKURA NZ A3 No: MUNCASTER3-03