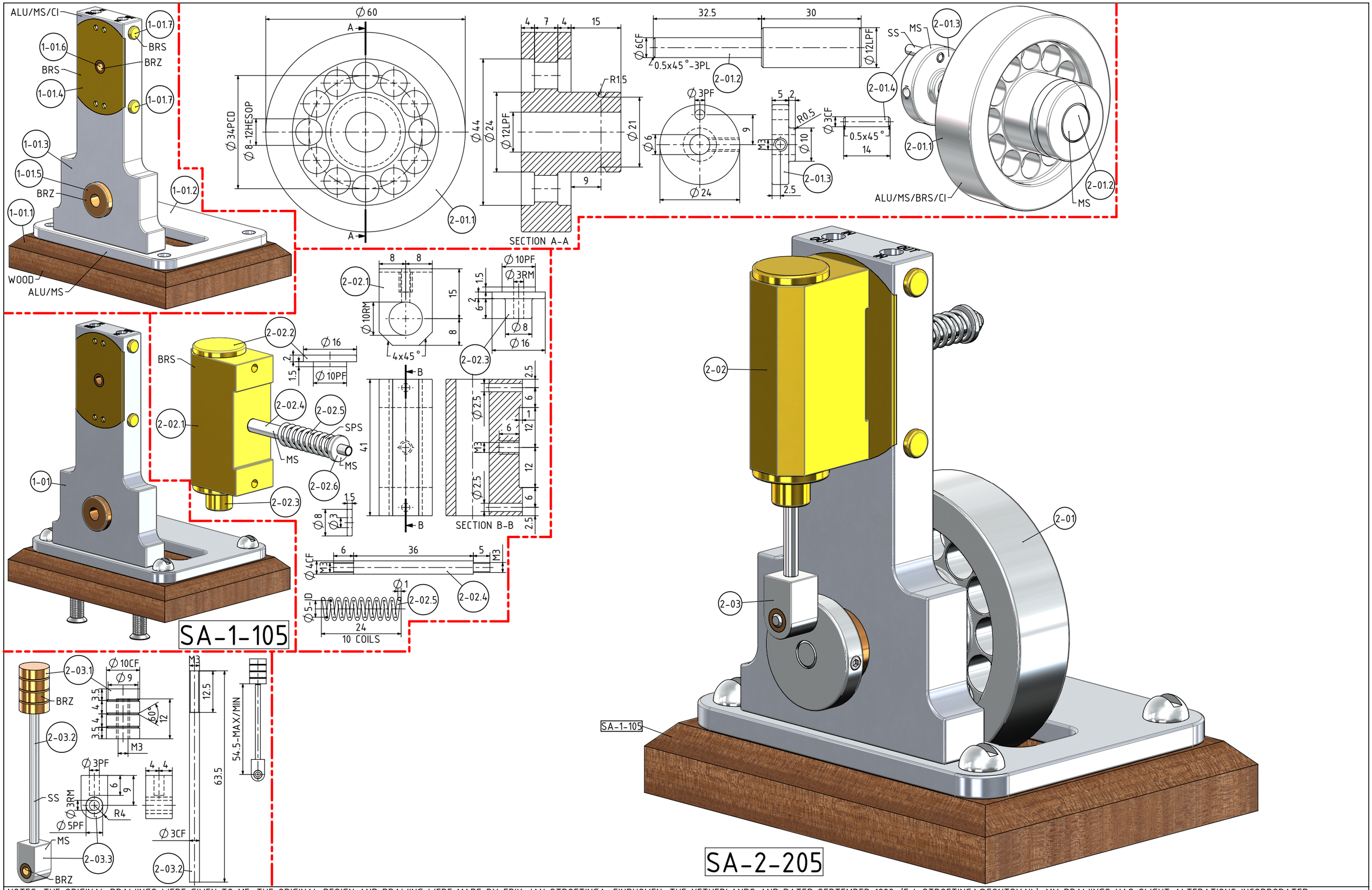

NOTES: THE ORIGINAL DRAWINGS WERE GIVEN TO ME. THE ORIGINAL DESIGN AND DRAWING WERE MADE BY ERIK-JAN STROETINGA, EINDHOVEN, THE NETHERLANDS AND DATED SEPTEMBER 1998. (E.J. STROETINGA@FONTSY.NL). MY DRAWINGS HAS SLIGHT ALTERATIONS INCORPORATED.

TITLE

A 1 CYLINDER VERTICAL OSCILLATING STEAM ENGINE (BORE=10mm STROKE=18mm)

DRAWING CONTENTS

PARTS AND ASSEMBLIES

PROJECT No 09A-39-00

JDW DRAUGHTING SERVICES

J.A.M. DE WAAL. 12 BRIGHTWELL STREET PAPAKURA 2110. NEW ZEALAND. PHONE: 0064 09 2988815. MOB: 0211791000 E-MAIL: dewaal@xtra.co.nz.

PROJECTION JDWDS

DATE DECEMBER 2024

SHEET: 02 OF 02

MODEL SCALE: 1:1

DWG SCALE: 1:1 @A3 OR AS SHOWN

Copyright © J.A.M. DE WAAL PAPAKURA NZ

A3 No:09A-39-00-SHT-02

DRAWINGS ARE FOR PERSONAL USE ONLY NOT FOR COMMERCIAL PURPOSES