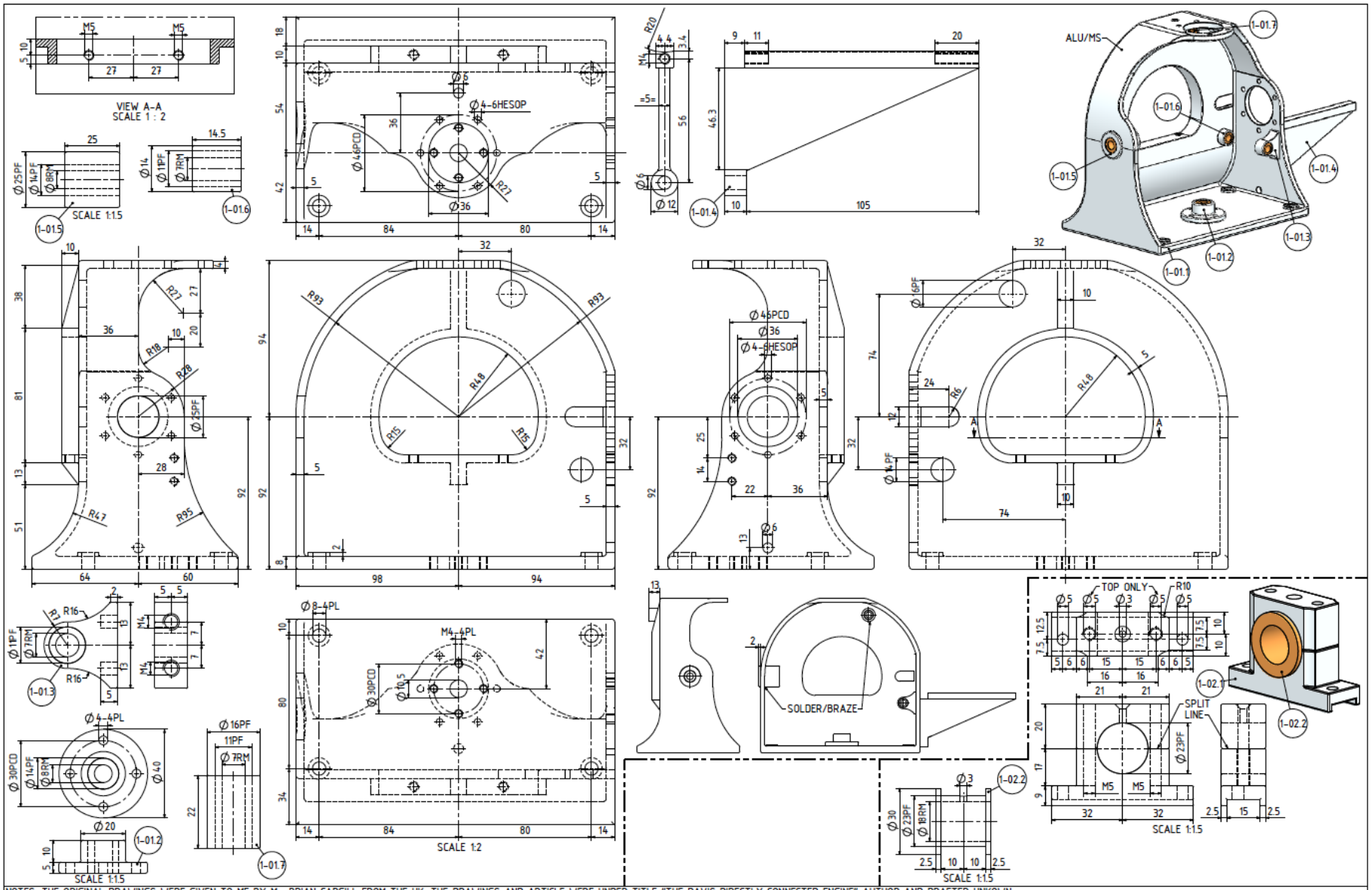

NOTES: THE ORIGINAL DRAWINGS WERE GIVEN TO ME BY Mr. BRIAN CARGILL FROM THE UK. THE DRAWINGS AND ARTICLE WERE UNDER TITLE "THE DAVIS DIRECTLY CONNECTED ENGINE" AUTHOR AND DRAFTER UNKOWN

TITLE AN EXPERIMENTAL 2 CYLINDER DIRECT CONNECTED STEAM ENGINE (B=32mm S=96mm)	DRAWING CONTENTS PARTS AND ASSEMBLIES	PROJECT No 09D-23-00 JDW DRAUGHTING SERVICES J.A.M. DE WAAL. 12 BRIGHTWELL STREET PAPAKURA 2110. NEW ZEALAND. PHONE: 0064 09 2988815. MOB: 0211791000 E-MAIL: dewaal@xtra.co.nz.	PROJECTION JDWDS DATE APRIL 2021 SHEET: 04 OF 07 A3
			MODEL SCALE: 1:6.35 DWG SCALE: 1:1 @A3 OR AS SHOWN Copyright © J.A.M. DE WAAL PAPAKURA NZ No: 09D-23-00-SHT04

DRAWINGS ARE FOR PERSONAL USE ONLY NOT FOR COMMERCIAL PURPOSES