THIS DRAWING REMAINS THE PROPERTY OF JDW DRAUGHTING SERVICES J.A.M.DE WAAL,12 BRIGHTWELL STREET PAPAKURA 2110 NEW ZEALAND (09)2988815 IF IN DOUBT ASK

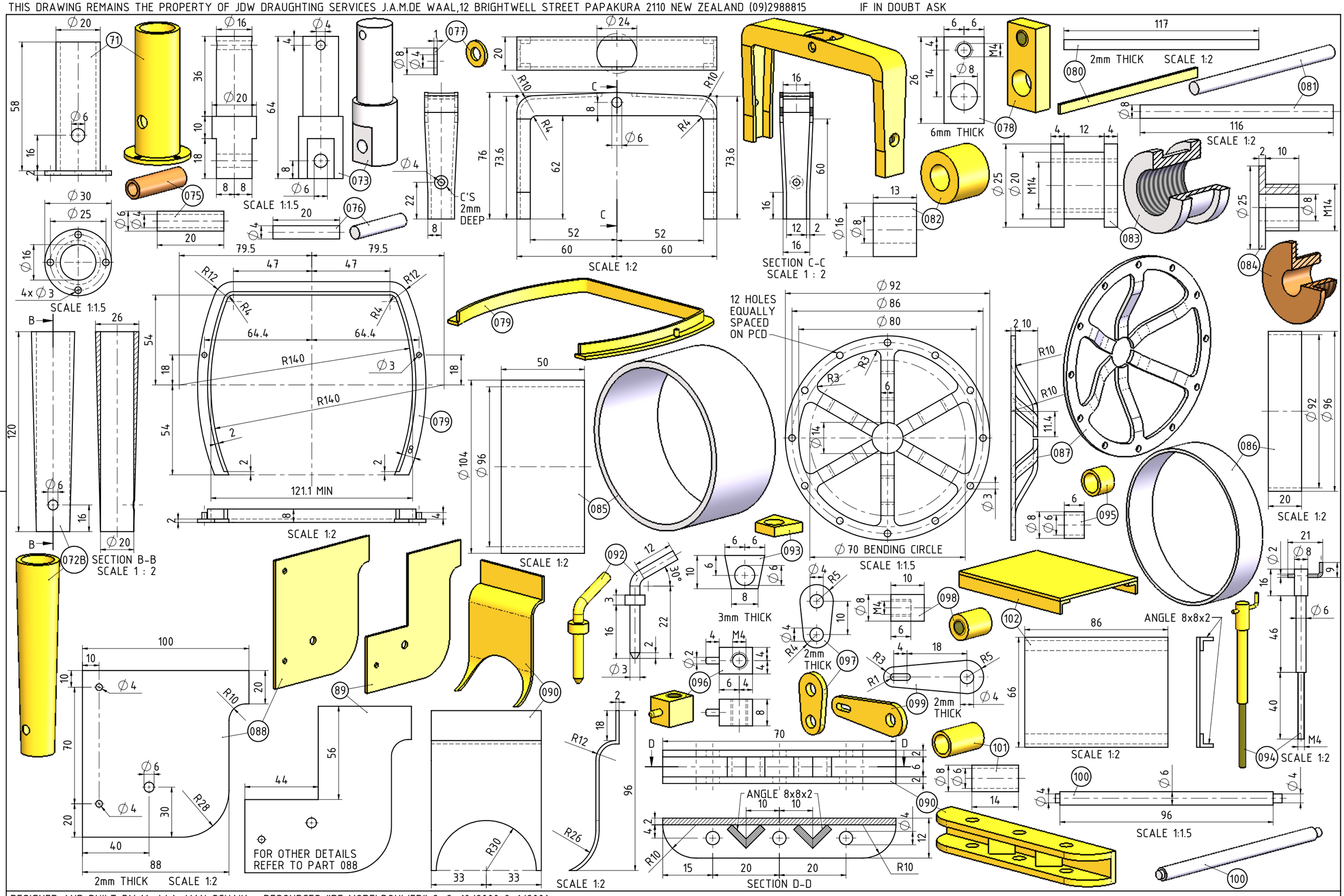

DESIGNED AND BUILT BY Mr W.A. VAN SCHAIK - RESOURCES "DE MODELBOUWER" 8, 9, 10/2000 & 1/2001 -

A3	TITLE STEAM ROLLER WITH OSCILLATING ENGINE PARTS	A ISSUED FOR CONSTRUCTION REV DESCRIPTION DATE	JDW DRAUGHTING SERVICES 12 BRIGHTWELL STREET PAPAKURA NEW ZEALAND TEL/FAX 0064-09-2988815 E-MAIL:dewaal@xtra.co.nz	DRAWN BY J.A.M. DE WAAL DATE APRIL 2010	PROJECTION SCALE 1:1@A3 or AS SHOWN	DRAWING NUMBER SR-006 SHEET 06 of 09 REV A

IF NOT STATED ALL CHAMFERS AND FILLETS 0.25mm DO NOT SCALE OF DRAWING REMOVE ALL BURS AND SHARP EDGES